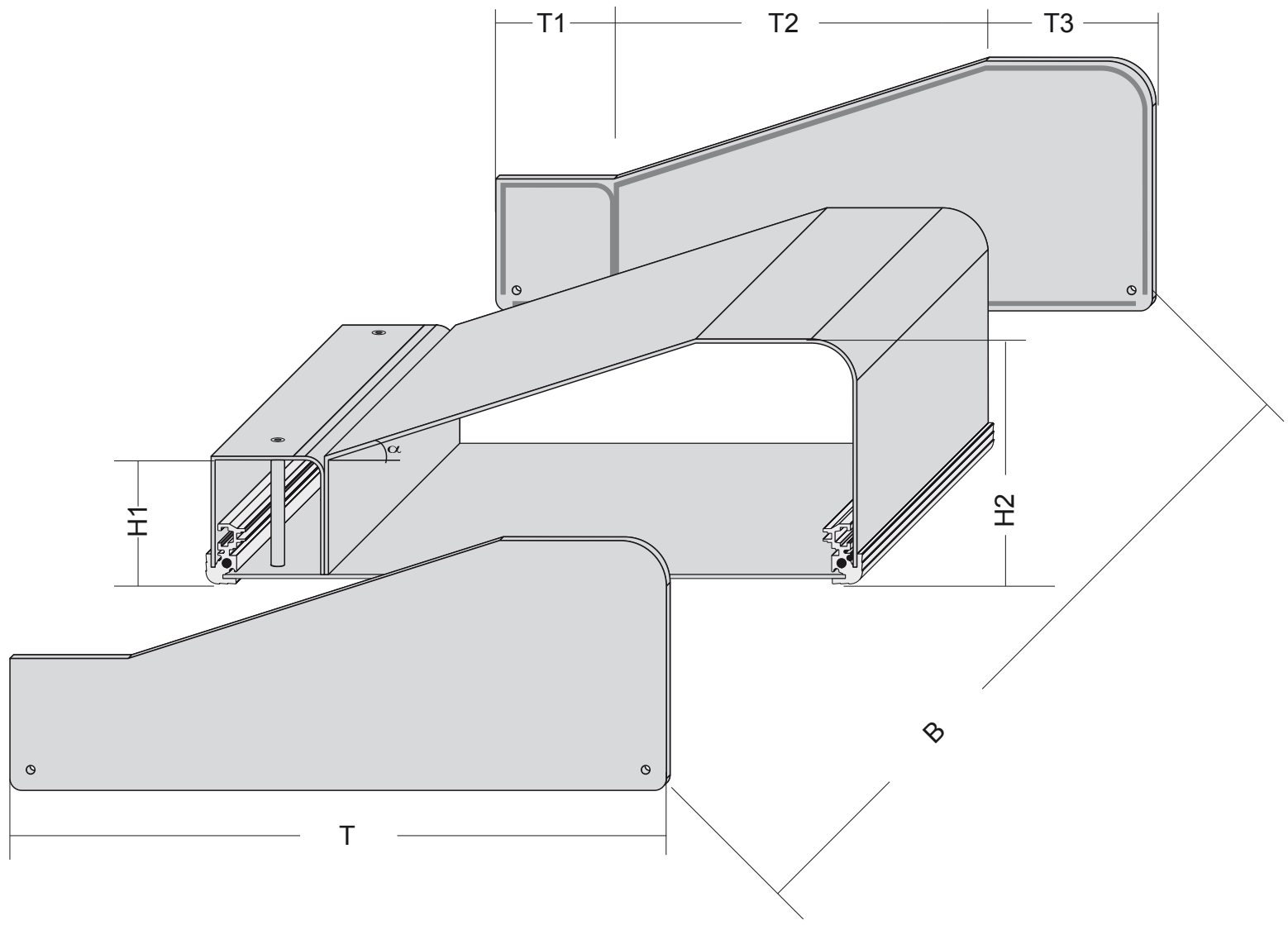

www.Prioline.com

© 2002-2007 Richard Wöhr GmbH Gräfenau 58-60 D-75339 Höfen/Enz
Tel: +49(0)781-9540-0 Fax: +49(0)7081-9540-90 Email: Prioline@WoehrGmbH.de

Unifilar drawing **PRIO**line
2-chamber enclosure type XI

1/2

Side panel right

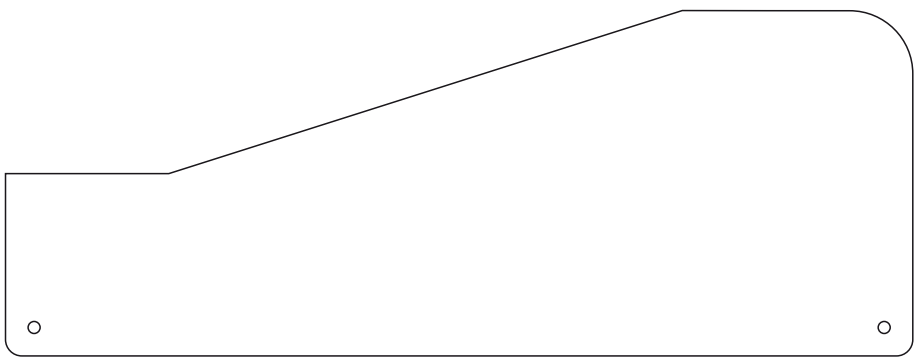

Side panel left

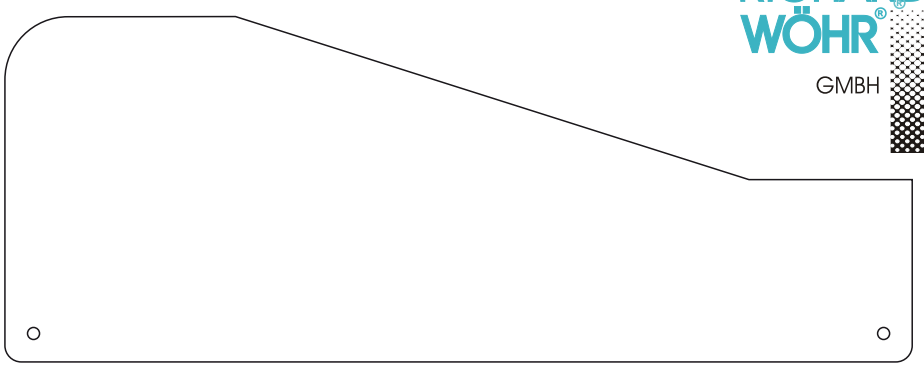

Top panel - chamber I

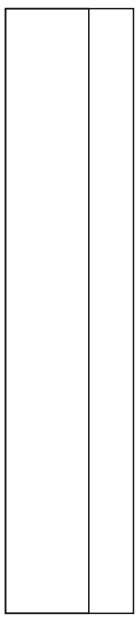

Top panel above

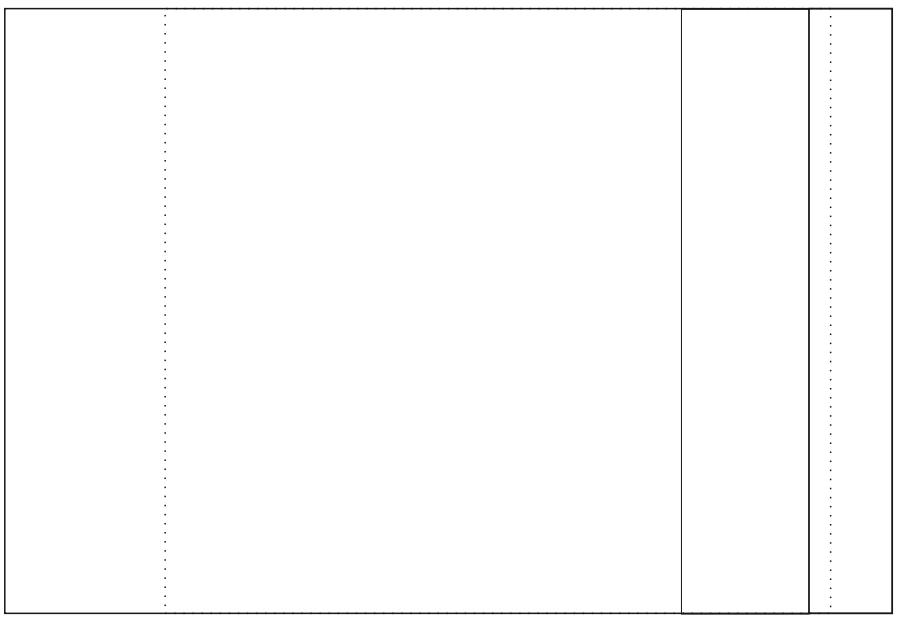

Base panel / bottom

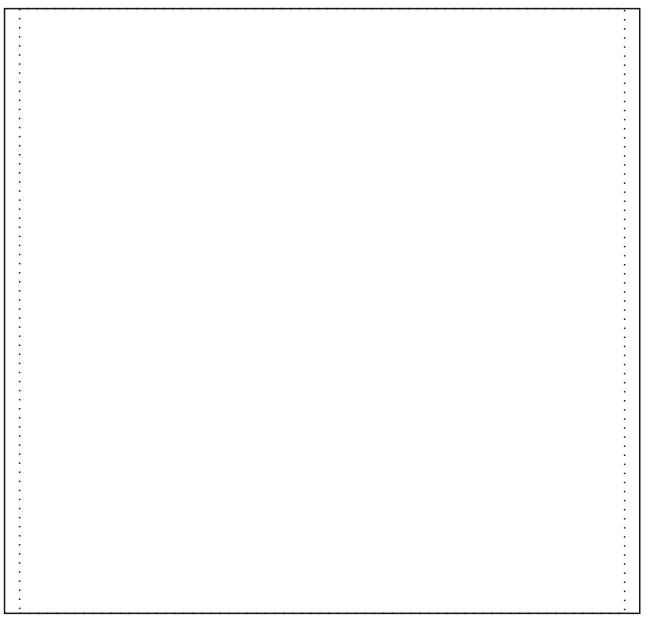

Please specify your desired mechanical treatment
and return this sheet with your inquiry / order.
Please also do not forget to specify your desired surface treatment.

e.g. ☐ anodized in natural color (cut edges blank)
☐ electrically conductive chromated,
front side varnished in RAL 7035 structure
☐ _____

Unifilar drawing **PRIO**line
2-chamber enclosure type XI

2/2